PRODUCT SHEET

Snap Frame Standard A1 Mitred Corners 25 mm Wood

KRA1G25LB

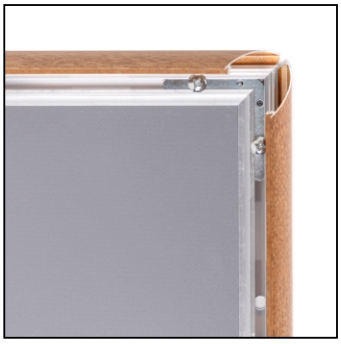

- **Cost effective, elegant display solution for A1 posters**
- **Quick poster replacement**
- **Over 20 variations available**

PRODUCT SHEET

Snap Frame Standard A1 Mitred Corners 25 mm Wood

KRA1G25LB

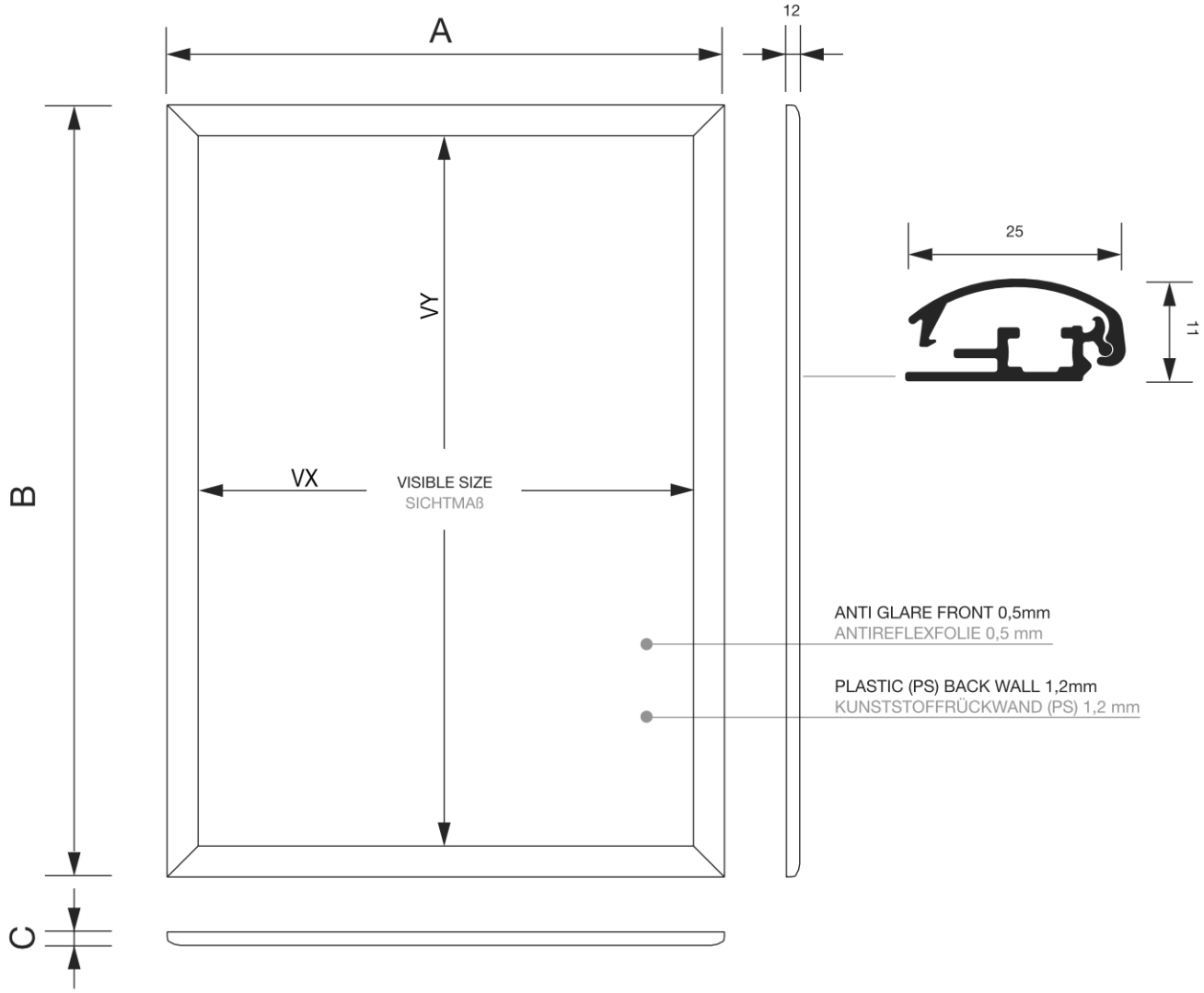

BACK VIEW
RÜCKANSICHT

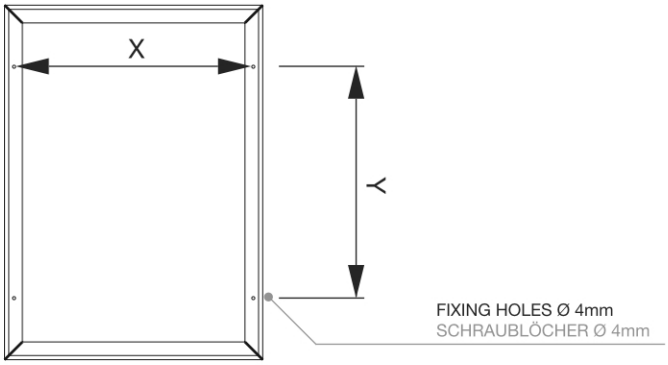

ACCESSORIES
ZUBEHÖR

(SOSSET)
SET OF SCREWS
SCHRAUBENSET

(KRHOOK)
HANGING HOOKS
HAKEN ZUM ABHÄNGEN

(HSKR)
HANGING SET
HÄNGESET

PRODUCT SHEET

Snap Frame Standard A1 Mitred Corners 25 mm Wood

KRA1G25LB

GENERAL INFO

SKU	Sizes (mm) (A x B x C)	Format (mm)	Visible size (mm) (VXxVY)	Hole spacing (mm) (XxY)
KRA1G25LB	625 x 872 x 11	A1 (594 x 841 mm)	575 x 822 mm	605 x 583 mm

Orientation	Weight (kg)
Vertical	1,67

PACKAGING INFORMATION

Packaging unit 1 (mm)	Packaging unit 2 (mm)	Packaging unit 3 (mm)
881 x 634 x 20	-	-

Palette number of pieces	Palette weight (kg)	Palette type
100	254	EUR

ADDITIONAL INFORMATION

Product certifications	EAN
No	8596052191442

SIZE GUIDE

Snap Frame Standard A1 Mitred Corners 25 mm Wood
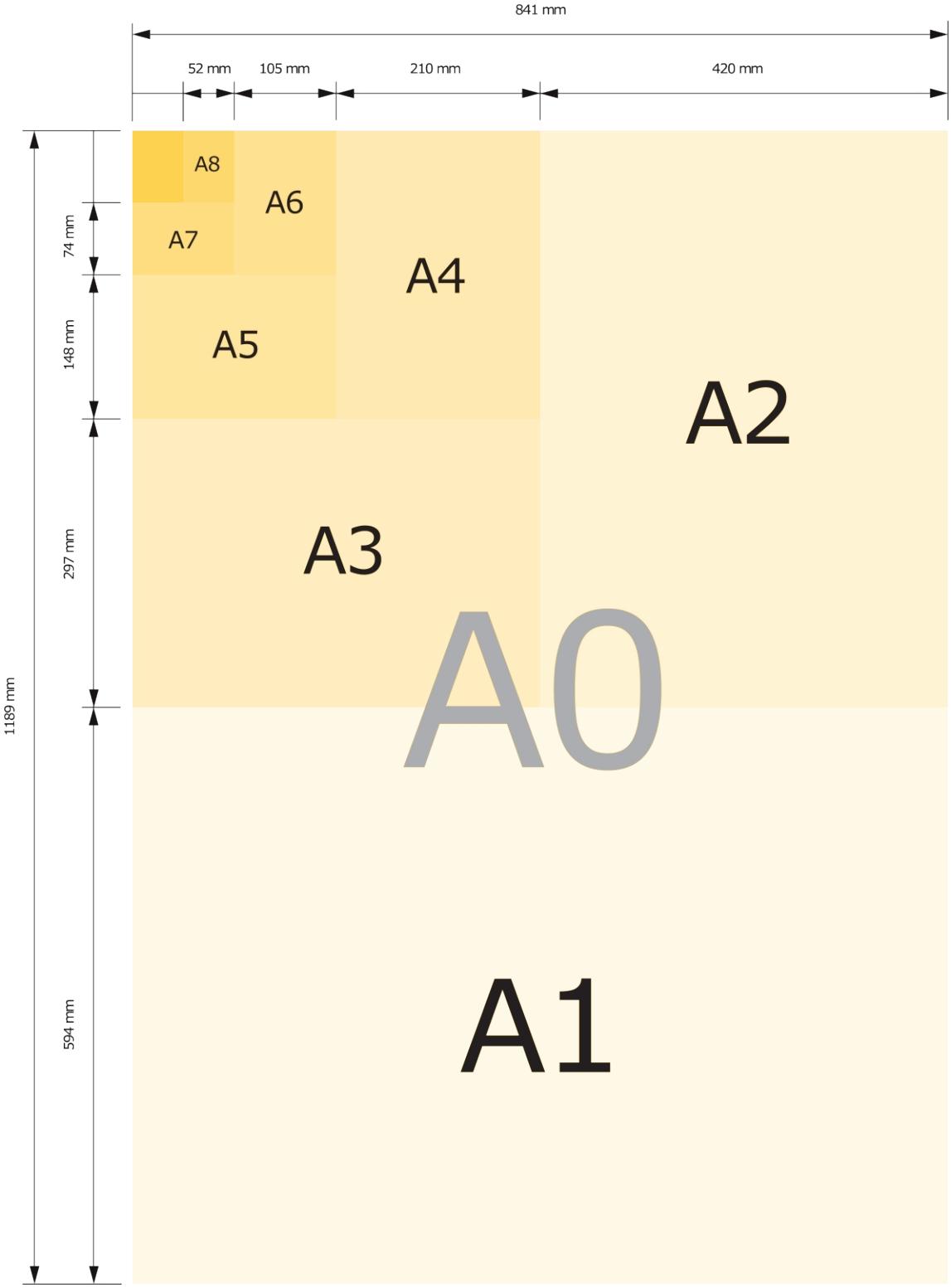
KRA1G25LB